MASONITE®

8'0" CHEYENNE 2 PANEL PLANK CAMBER-TOP

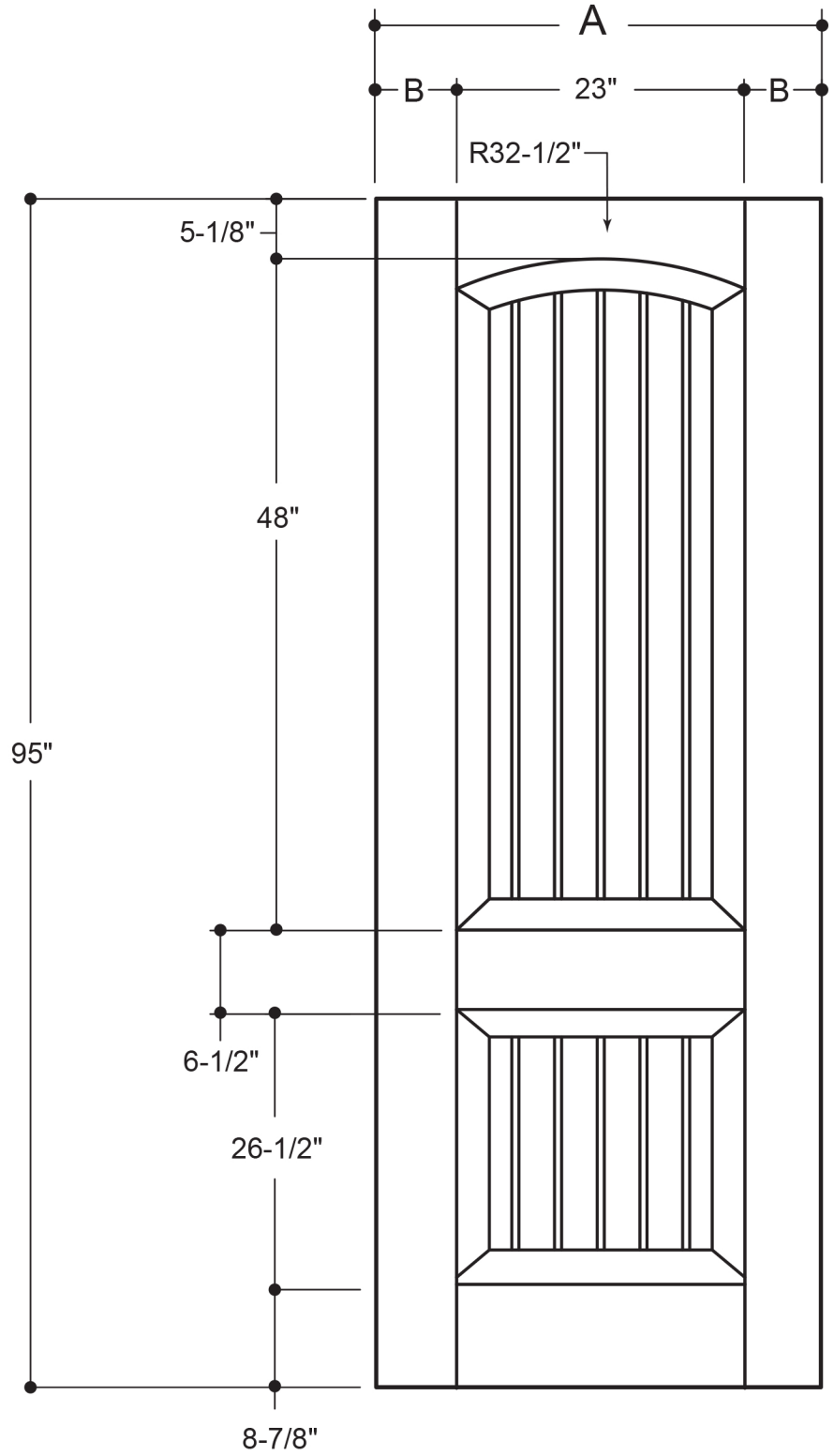

	A	31-3/4"	2'8"
	B	4-3/8"	
	A	33-3/4"	2'10"
	B	5-3/8"	
	A	35-3/4"	3'0"
	B	6-3/8"	

PART NO.	QTY.	DESCRIPTION
		BELLEVILLE® 8'0" SMOOTH FIBERGLASS

Our continuing program of product improvement makes specifications, design and product detail subject to change without notice.
© 2013 Masonite International Corporation. All Rights Reserved.