MASONITE

PARLIAMENT 8 PANEL

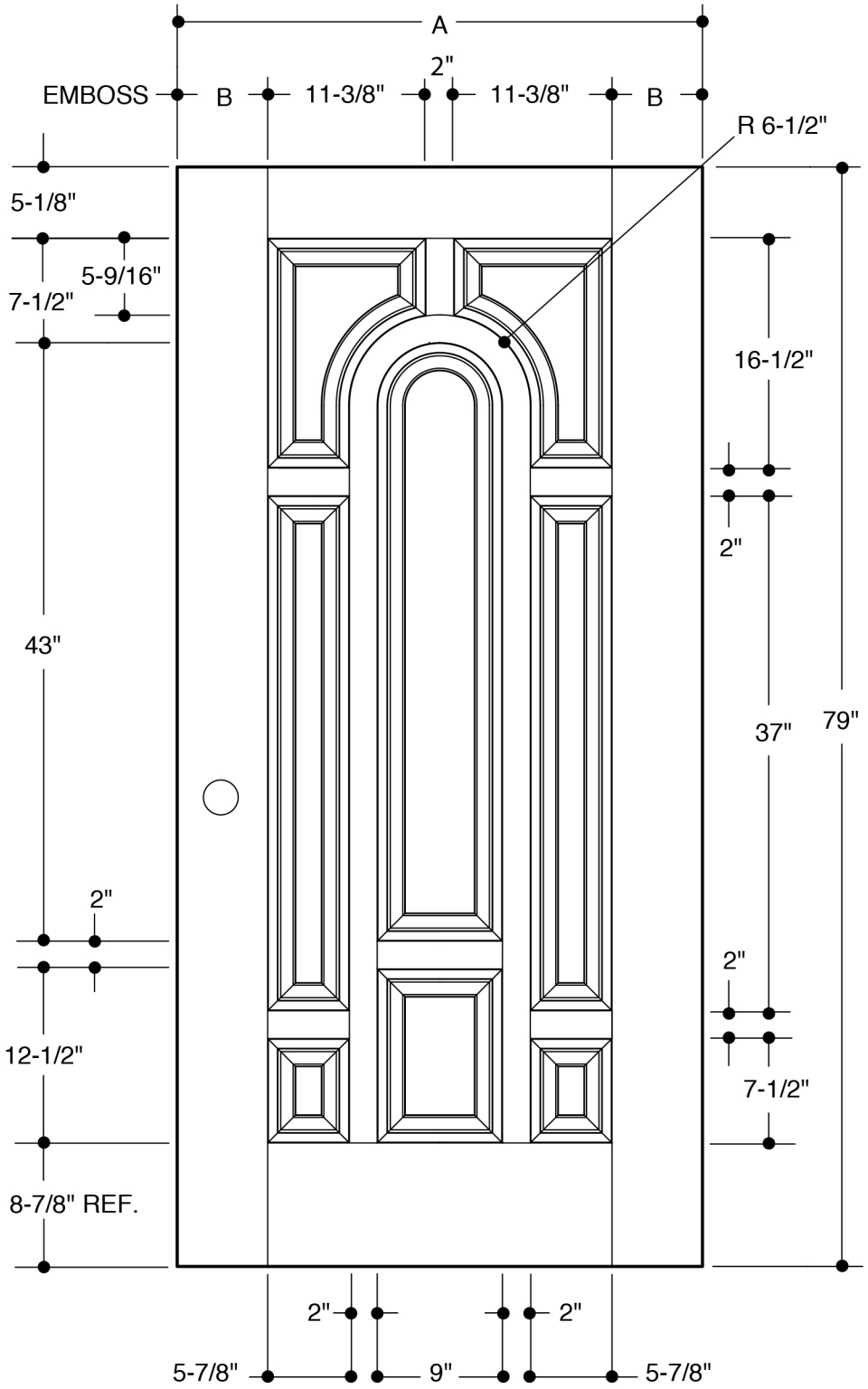

A	33-3/4"	2'10"
B	4-1/2"	
A	35-3/4"	3'0"
B	5-1/2"	

PART NO.	QTY.	DESCRIPTION
		BELLEVILLE® SMOOTH FIBERGLASS

Our continuing program of product improvement makes specifications, design and product detail subject to change without notice.

© 2014 Masonite International Corporation. All Rights Reserved.