MASONITE

UNIVERSAL 2 PANEL

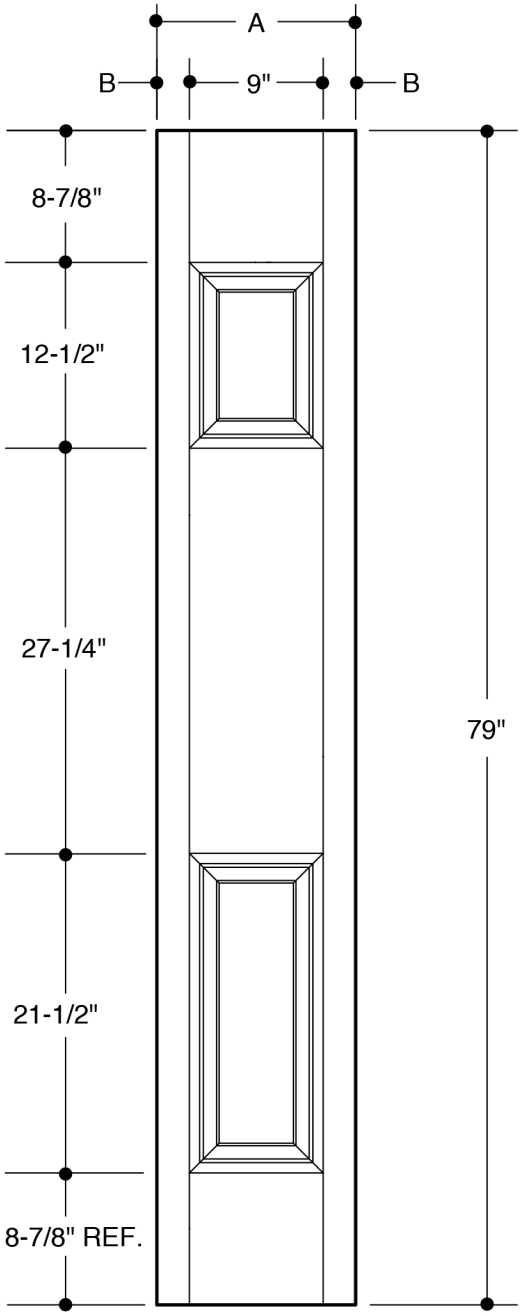

	A	11-7/8"	12"
	B	1-7/16"	
	A	13-7/8"	14"
	B	2-7/16"	

Please Note:

1. Flip panel for use with 3/4 lite style door.

PART NO.	QTY.	DESCRIPTION
		BELLEVILLE® SMOOTH FIBERGLASS SIDELITE

Our continuing program of product improvement makes specifications, design and product detail subject to change without notice.
© 2014 Masonite International Corporation. All Rights Reserved.